Different Speed Control Techniques of DC Motor: A Comparative Analysis

Virendra Singh Solanki, Virendra Jain , Anil Kumar Chaudhary
Department of Electrical and Electronics Engineering,RGPV university, Mandsaur, India
Virendra.s.solanki@gmail.com, er.virendrajain@gmail.com, anilkumar6352@gmail.com

Abstract- The important control characteristics of DC motor have contributed in the extensive use of DC motor in the industry. With the increasing use of power semi conductor units, the speed control of DC motor is increasingly getting sophisticated and precise. Speed of the DC motor is controlled by controlling the armature voltage. Armature voltage is controlled using different single phase AC/DC converter. Half converter, semi converter, full converter and dual converter are some of the thyristor based circuits which are used for speed control of DC motor. This paper studies different speed control techniques of DC motor and makes a comparative study of different converter based speed controller techniques.

Index Terms- AC/DC converter, DC motor, speed control.

I. Introduction

DC motors are widely used in industry because of its low cost, less complex control structure and wide range of speed and torque. There are many methods of speed control of DC drives namely field control, armature voltage control and armature resistance control methods [2]. DC motors provide high starting torque which is required for traction applications. In DC motor control over a large speed range, both below and above the rated speed can be achieved quite easily. DC motors have inherent disadvantages that it needs regular maintenance and it is bulky in size. DC motors are tailor made, so it is very difficult to replace them. In general, armature voltage control method is widely used to control the DC drives. In this method, a controlled rectifier, or chopper is used but due involvement of power electronics elements, nonlinear torque speed characteristics are observed which are undesirable for control performance [1].

Nowadays state of art speed control techniques of DC motor are available. Thyristor based DC drives with analog and digital feedback control schemes are used. Phase locked loop control technique is also used for precise speed control and zero speed regulation. In past, many researchers presented various new converter topologies of DC motor control for different applications of industry [5,6,8,9], but at the basic level in all of them thyristor based AC-DC converter are used. MATLAB with its toolboxes like Simulink and SimPowerSystem are used for simulation [3,7].

This paper provides a comparative study of different thyristor based speed control techniques.

II. Mathematical modelling of DC motor

The dynamic and steady-state model of separately excited DC motor is needed to analyse the torque speed characteristics. The schematic representation of the model of a separately excited DC motor is shown below in figure 1 in which e_a is the terminal voltage applied to the motor, R_a and L_a are the resistance, and inductance of the armature circuit respectively, R_f and L_f are the resistance, and inductance of the field circuit respectively, e_b is generated back emf and T_m is the electromagnetic torque developed by the motor. The related DC Motor parameters are mentioned in appendix A.

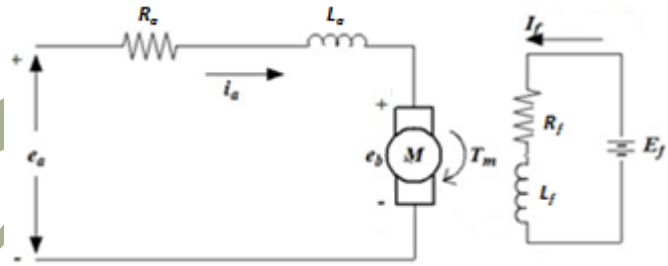

Figure 1: Equivalent circuit of separately excited DC motor

The torque is produced as a result of interaction of field flux with current in armature conductors and is given by Eq. (1)

$$T_m = K_t \phi i_a \quad (1)$$

Here is a constant depending on motor windings and geometry and ϕ is the flux per pole due to the field winding.

The direction of the torque produced depends on the direction of armature current. When armature rotates, the flux linking the armature winding will vary with time and therefore according to Faraday's law, an emf will be induced across the winding. This generated emf, known as the back emf, depends on speed of rotation as well as on the flux produced by the field and given by Eq. (2)

$$e_b = K_t \phi \omega \quad (2)$$

By applying KVL at input side of in figure 1,

$$e_a = i_a R_a + L_a \frac{di_a}{dt} + e_b \quad (3)$$

In steady state condition, $E_a = I_a R_a + E_b$ (

In terms of torque and speed, the steady state equation will be given by Eq. (5)

$$E_a = \frac{T_m}{K_t\phi} R_a + K_t\omega\phi \qquad (5)$$

$$\text{So, } \omega = \frac{E_a}{K_t\phi} - \frac{T_m}{(K_t\phi)^2} R_a \qquad (6)$$

Thus from the above equation it is clear that speed can be controlled by varying there parameters, namely , , and . The three methods of speed control are as following:

i. Armature voltage controlled ( ).
ii. Armature resistance controlled ( ).
iii. Flux controlled ( ).

Speed control using armature resistance by adding external resistor is not used very widely because of the large energy losses due to the R_{ext}. Armature voltage control is normally used for speed up to rated speed (base speed). Flux control is used for speed beyond rated speed but at the same time the maximum torque capability of the motor is reduced since for a given maximum armature current, the flux is less than the rated value and so as the maximum torque produced is less than the maximum rated torque [4]. Here the main attention is given to the armature voltage control method. In the armature voltage control method, the voltage applied across the armature e_a is varied keeping field voltage constant. As equation (6) indicates, the torque-speed characteristic is represented by a straight line with a negative slope when the applied armature voltage is ideal, that ideal torque speed characteristic is illustrated in figure 2 [10].

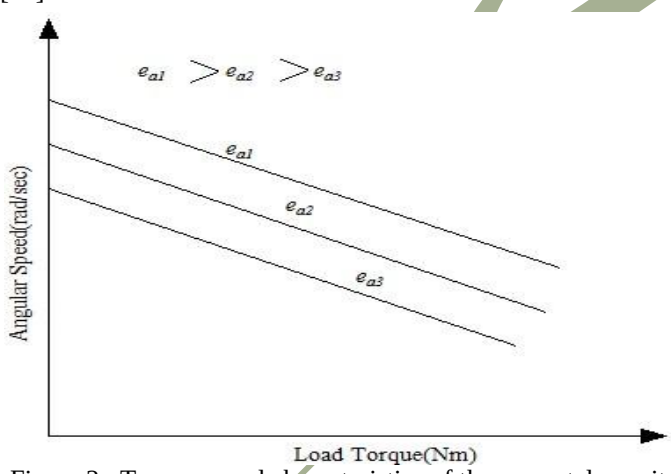

Figure 2: Torque speed characteristics of the separately excited DC motor at different armature voltages

III. THYRISTOR BASED TECHNIQUES OF DC MOTOR SPEED CONTROL

A half wave converter in the field circuit will increase the

A separately excited DC motor fed through single phase half wave converter is shown in figure 3. Single phase half wave converter feeding a DC motor offers only one quadrant drive. Such type of drives are used up to about 0.5 kW DC motor.

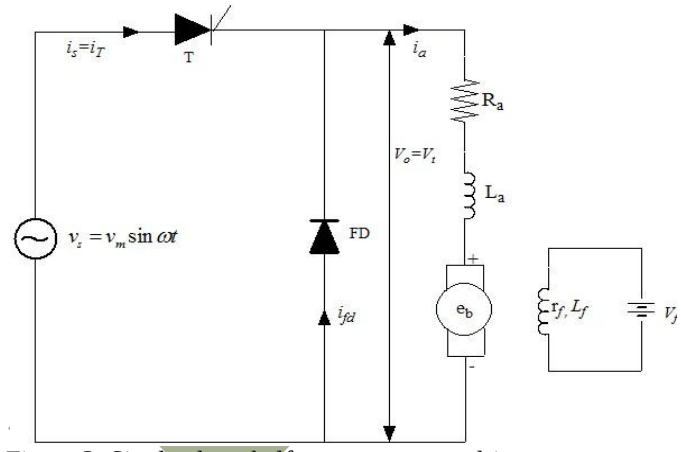

Figure 3: Single phase half wave converter drive

For single phase half wave converter, average output voltage of converter can be calculated as, given as Eq. (7)

$$V_0 = \frac{V_m}{2\pi}(1+\cos\alpha), \text{ for } 0<\alpha<\pi \qquad (7)$$

magnetic losses of the motor due to high ripple content on the field excitation current, so an ideal DC source is preferred over half wave converter for field circuit. A separately excited DC motor fed through single phase semiconverter is shown in figure 4. This converter also offer only one quadrant drive and is used up to 15 kW DC drives.

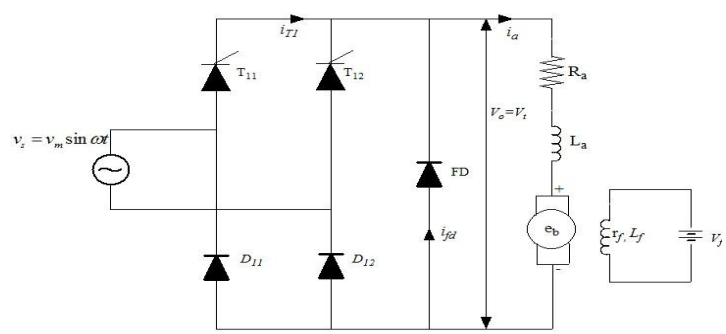

Figure 4: Single phase semi converter drive

With a single phase semiconverter in the armature circuit, equation (8) gives the average armature voltage as,

$$V_0 = V_t = \frac{V_m}{\pi}(1+\cos\alpha), \text{ for } 0<\alpha<\pi \qquad (8)$$

The armature voltage is varied by single phase full wave converter as shown in figure 5. It is a two quadrant drive, and is limited to applications upto 15kW. The armature converter gives $+V_o$ or $-V_o$ and allows operation in the first and fourth quadrant. The converter in the field circuit could be semi, full or even dual converter. The reversal of the armature or field voltage allows operation in the second and third quadrant.

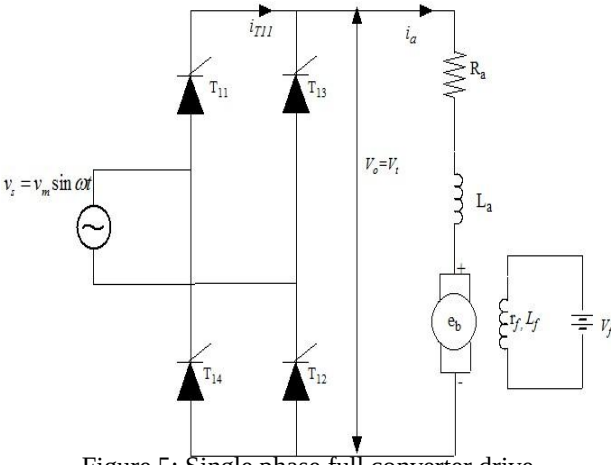

Figure 5: Single phase full converter drive

The average armature voltage in armature circuit for single phase full converter drive is given by Eq. (9)

$$V_0 = V_t = \frac{2V_m}{\pi}(1+\cos\alpha), \text{ for } 0<\alpha<\pi \qquad (9)$$

To realize single phase dual converter, two single phase full converters are connected as shown in figure 6.

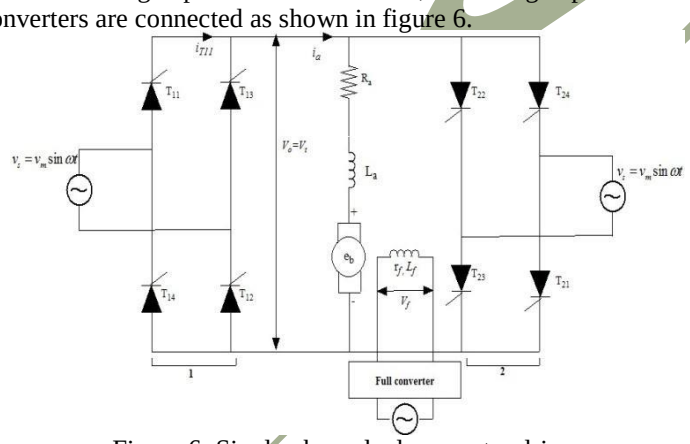

Figure 6: Single phase dual converter drive

In fig. 6, there are two single phase full wave converters either converter 1 operates to supply a positive armature voltage V_o, or converter 2 operates to supply negative armature voltage $-V_o$. Converter 1 provides operation in first and fourth quardants, and converter 2 provides operation in second and third quardants.It is four quardant drive and provides four modes of operation: forward powering, forward braking (regenration), reverse powering, and reverse breaking (regeneration). The field converter could be a full wave converter, a semiconverter, or a dual converter.

If converter 1 operates at a firing angle of α_1 then equation (10) gives the armature voltage as,

$$V_0 = V_t = \frac{V_m}{\pi}(1+\cos\alpha_1), \text{ for } 0<\alpha<\pi \qquad (10)$$

And similarly, if converter 2 operates at a firing angle of α_2 then equation (11) gives the armature voltage as, [11].

$$V_0 = V_t = \frac{V_m}{\pi}(1+\cos\alpha_2) \qquad (11)$$

IV. SIMULATION

To investigate the effect of armature voltage on the torque speed curve six different firing angles are used with the voltage applied to the field circuit kept constant 300V. A constant 240 V, 50 Hz AC supply is applied to the input of single phase half wave converter. The average value of converter output is controlled by changing the firing angle α.

A cosine firing angle scheme is used to change the firing angle. The firing angles used to get different output voltages for armature are 0°, 18°, 36°, 54°, 72° and 89°.

The simulink model used to get torque speed characteristic for a single phase half wave converter is shown in figure7.

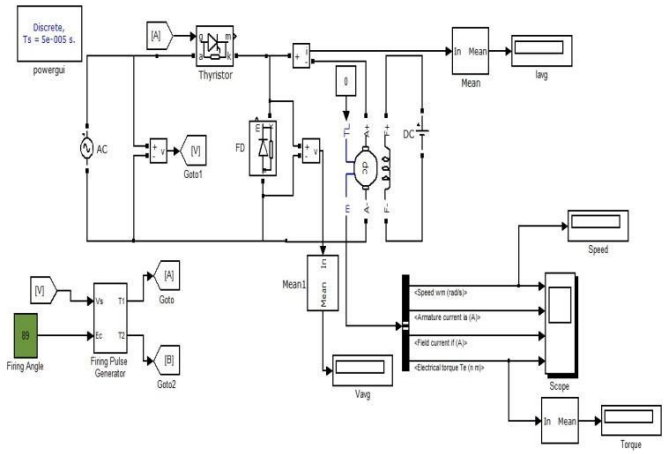

Figure 7: Simulink realization of armature voltage speed control method using a single phase half wave converter drive

The torque speed curves for a single phase half wave converter drive are shown in figure 8.

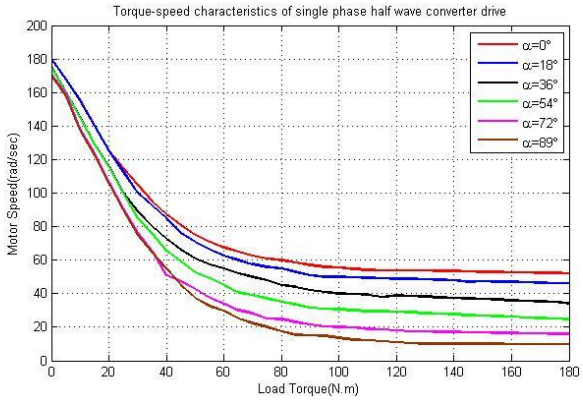

Figure 8: Torque-speed characteristics for a single phase half wave converter drive

It is clear that torque speed contains both linear and non linear regions. The linear region of operation for 0° firing angle approximately starts at 100 N.m load torque, but for 18° firing angle linear region starts at 105N.m load torque, while for 36° firing angle linear region starts at approximately at 110 N.m and so on. The discontinuous armature current results in a highly non-linear torque speed characteristic. Figure 9 and 10 shows the armature voltage and current obtained at 50 N.m (in the non-linear region) and 135 N.m (in linear region) with firing angle 89°. These figures clearly show the discontinuous and continuous operation of single phase half wave converter drive in non linear and linear regions, respectively.

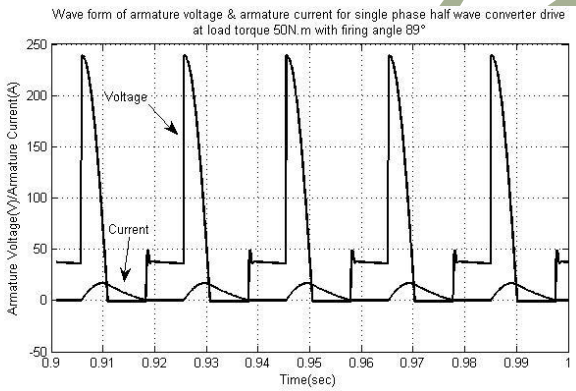

Figure 9: Armature current and voltage at 50N.m with firing angle 89° for single phase half wave converter drive

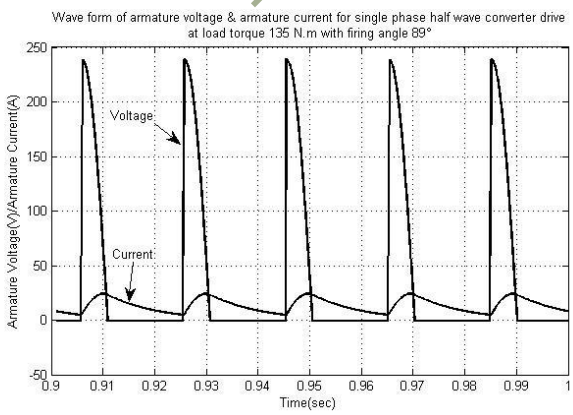

Figure 10: Armature current and voltage at 135N.m with firing angle 89° for single phase half wave converter drive

To investigate the effect of armature voltage on the torque speed characteristic, six different firing angles are applied to the firing angle generator while the voltage applied to the field circuit is kept constant 300V. A constant 240V, 50Hz AC is applied to the input of single phase semi converter. The average value of the converter output is controlled by the firing angle (α). The firing angles used to get different output voltages for armature are 0°, 18°, 36°, 54°, 72° and 89°. The simulink model used to get torque speed characteristic for a single phase half wave converter is shown in figure11.

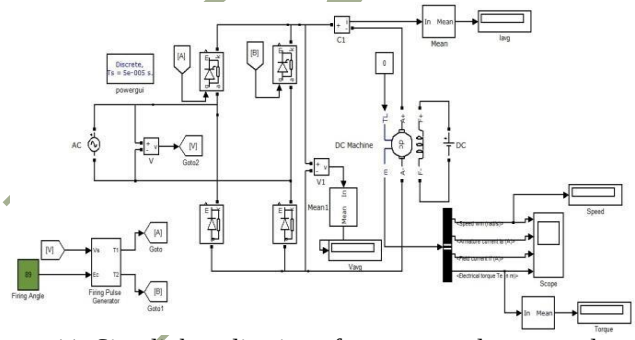

Figure 11: Simulink realization of armature voltage speed control method using a single phase semiconverter drive

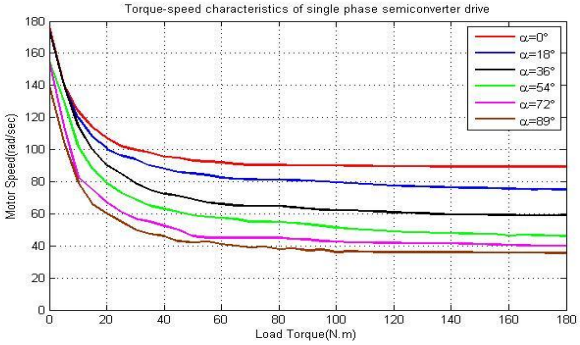

Figure 12: Torque-speed characteristics for a single phase semiconverter drive

The fig 12, showing the torque speed cherecteristics, the non linear and linear operating regions are clearly visible for different firing angles. The linear operating range for single phase semi converter drive decrease as firing angle increases. For firing angle 0°, it is 60 to 180 N.m, for 18° it is 65 to 180 N.m, for 36° it is 80 to 180 N.m and for 89° it is 100 to 180 N.m. The non linearity in the speed torque characteristic is due to the discontinuity in armature current. Figure 13 and 14 shows the armature voltage and current obtained at 50 N.m (in the non-linear region) and 135 N.m (in linear region) with firing angle 0°. These figures show the discontinuous and continuous operation of single phase semiconverter drive in non linear and linear regions, respectively.

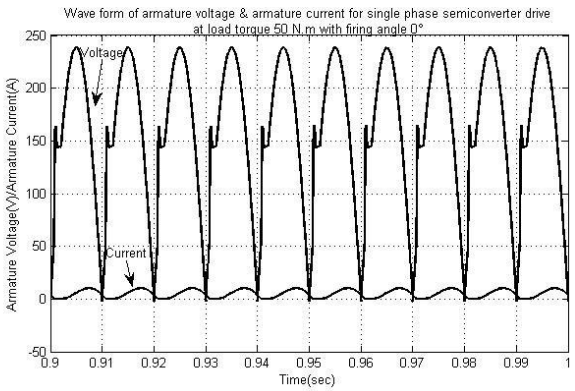

Figure 13: Armature current and voltage at 50N.m with firing angle 0° for single phase semiconverter drive

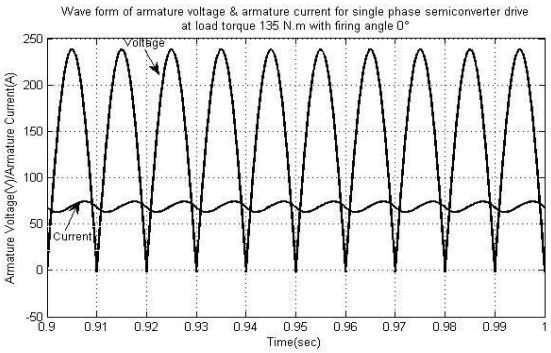

Figure 14: Armature current and voltage at 135N.m with firing angle 0° for single phase semiconverter drive

The simulink model used to get torque speed characteristic for a single phase full converter drive is shown in figure15. The effect of armature voltages on the torque speed characteristic is observed for six different firing angles, as the voltage applied to the field circuit is kept constant at 300V, and a constant 240V, 50 Hz AC is applied to input of single phase full converter. The average value of applied armature voltage is varied by varying the firing angle of full converter.

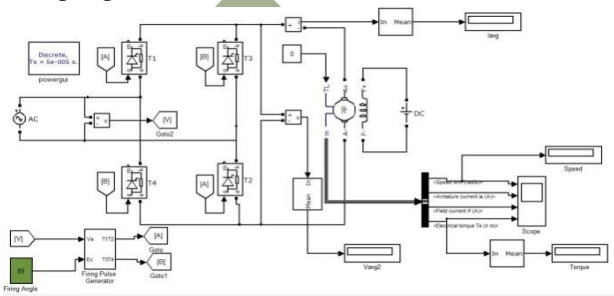

Figure 15: Simulink realization of armature voltage speed control method using a single phase full converter drive

Figure 16 shows the torque speed characteristics of single phase full converter drive with firing angles 0°, 18°, 36°, 54°, 72°, and 89°.

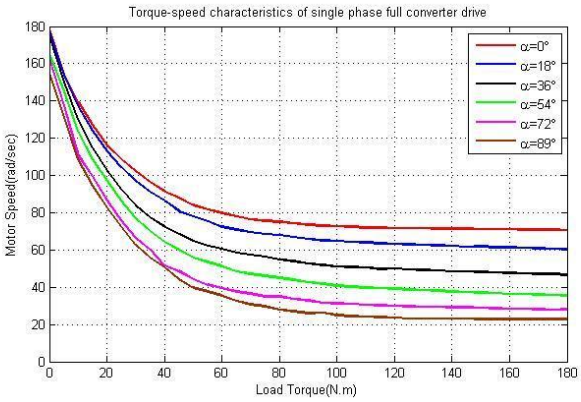

Figure 16: Torque-speed characteristics for a single phase full converter drive

Linear and non linear regions for single phase full converter drive are clearly visible in the above shown torque speed curve. Non linearity is because of the discontinuity in the armature current, and also it is observed that the range of non linearity increases as firing angle is increased. For firing angle 0°, non linearity range of load torque 0 to 85 N.m, for 18° it is 0 to 100 N.m, for 36°, it is 0 to 110 N.m,, for 54° it is 0 to 54 N.m and for 89° it is 0 to 120 N.m. The armature voltage and current waveforms for single phase full converter drives are shown in figure 17 and 18. These were obtained at 50 N.m (in the non-linear region) and 135 N.m (in linear region) with firing angle 89°. These figures show the discontinuous and continuous operation of single phase full converter drive in non linear and linear regions, respectively.

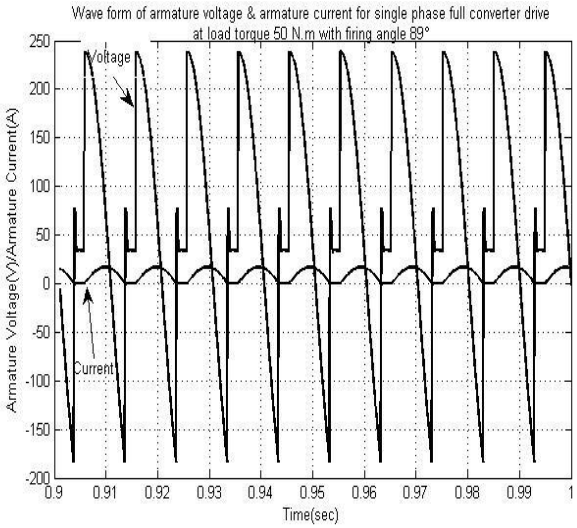

Figure 17: Armature current and voltage at 50N.m with firing angle 89° for single phase full converter drive

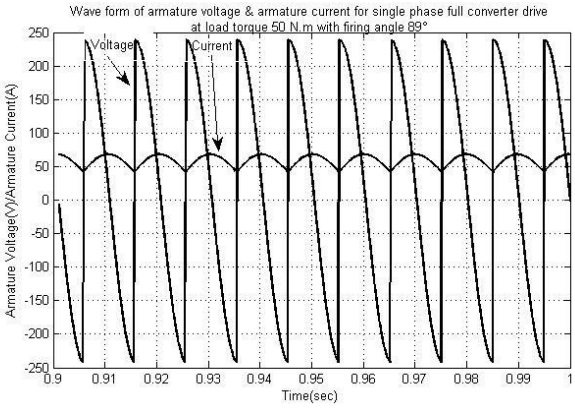

Figure 18: Armature current and voltage at 135N.m with firing angle 89° for single phase full converter drive

It is clearly seen that for all firing angle, the linear region of operation extends when single phase semi converter is used. The linear operating ranges of load torque for different converter drives with respect to firing angles are tabulated in table 1.

Table I: Linear operating range of Load torque for different converter drives and firing angles

	Load Torque(N.m)		
Drive type **Firing angle**	**Half wave Drive**	**Semiconverter Drive**	**Full wave converter Drive**
0	100 to 180	60 to 180	85 to 180
18	105 to 180	65 to 180	100 to 180
36	110 to 180	80 to 180	110 to 180
54	115 to 180	100 to 180	115 to 180
72	120 to 180	80 to 180	120 to 180
89	130 to 180	100 to 180	120 to 180

V. CONCLUSION

This paper presents speed control of separately excited DC motor using different single phase AC/DC converter. Speed torque curves for three types of single phase AC/DC converter (Half wave converter, Semiconverter ans full converetr) are obtained for a wide-range of loading conditions. From the above results, it can be concluded that the reason of non linearity in speed torque curve is discontinuity in armature current which is highly non-desirable for industrial applications. To remove the discontinuity in armature current an inductor should be used in series to make the armature current continuous. It is also observed that the range of non linearity is small in semiconverter as compared to half wave and full converter drives, so semi converter drives can be preferred for the wide range of load torque.

The parameters of separately excited DC motor

Rated Power (P)	5 Hp
Rated Armature Voltage	240 V
Armature Resistance R_a	2.518 Ω
Armature Inductance L_a	0.028 H
Field Resistance R_f	281.3 Ω
Field Inductance L_f	156 H
Rated Speed	1750 RPM
Rated Field Voltage	300 V

REFERENCES

[1] D. A. staton, M. I. McGilp and T. J. E. Miller, "DC machine teaching experiment," in proceedings of the European Power Electronics Association EPE, Brighton, pp. 35 – 40, 1993

[2] S. J. Chapman, Electric Machinery Fundamentals, New York: WCB/McGraw-Hill,1998.

[3] W. M. Daniels and A. R. Shaffer, "Re-inventing the electrical machines curriculum," IEEE Transactions on Education, vol. 41, pp. 92-100, May 1998.

[4] N. Mohan, Electric Drives: An integrative approach, University of Minnesota Printing services, 2000.

[5] M. Nedeljkovic and Z. Stojiljkovic, "Fast current control for thyristor rectifiers," IEE Proceedings- Electr. Power Appl., Vol. 150, No. 6, pp. 636-638, Nov. 2003.

[6] Alfio Consoli, Mario Cacciato, Antonio Testa and Francesco Gennaro, "Single Chip Integration for Motor Drive Converters With Power Factor Capability," IEEE Transactions on Power Electronics, Vol. 19, No. 6, pp. 1372-1379, Nov. 2004.

[7] S. Li and R. Challo, "Restructuring an electric machinery course with an integrative approach and computer-assisted teaching methodology," IEEE Transactions on Education., vol. 49,pp. 16-28, Feb.2006.

[8] Manoj Daigavane, Hiralal Suryawanshi and Jawed Khan, "A Novel Three Phase Series-Parallel Resonant Converter Fed DC-Drive System," Journal of Power Electronics, Vol. 7, No. 3, pp. 222-232, July 2007.

[9] Wai Phyo Anug, "Analysis on Modeling and Simulink of DC Motor and its Driving System Used for Wheeled Mobile Robot," World Academy of Science, Engineering and Technology 32, pp. 299-306, 2007.

[10] A. Gelen and S. Ayasun, "Effects of PWM chopper drive on the torque- speed characteristic of DC motor" 43rd International Universities Power Engineering Conference, 2008.

[11] P. S. Bhimbhra, Power Electronic, Khanna publishers, 2010.

AUTHORS

First Author – Virendra singh solanki ,is a, M.E.student , MIT Mandsaur ,RGPV University, Mandsaur,MP, India-458001
E-mail ID: virendra.s.solanki@gmail.com

Second Author – Virendra Jain ,is a, M.E.student ,of MIT Mandsaur ,RGPV University, Mandsaur,MP, India-458001
E-mail ID: e r . v i r e n d r a @ g m a i l . c o m

Third Author – Anil Kumar Chaudhary, Assistant Professor in MIT Mansdsaur, RGPV University,MP,458001
E-mail ID:- anilkumar6352@gmail.com