Design an Anti-Terrorist Robot for War Fields

Vishakha Tabhane[1], Sharnil Borghate[2], Vishal Chourpagar[3], Akshay Bhoyar[4]

[1, 2, 3, 4]*ETC Department SBJITMR, Nagpur, Maharashtra, India*

***Abstract*— The objective of this paper is to reduce human casualties in terrorist attacks such as 26/11 and 9/11. The anti-terrorist robot has been designed to deal with cruel terrorist attack. This project will consist of a RF Operated robot with high resolution wireless camera and laser gun. The robot will be small size and hence will be able to easily enter into the terrorist site. The position of the terrorist can be spotted and using the laser gun the terrorist can be shot down. Hence, we can reduce the number of casualties instead of sending policemen and army personnel. This robot can enter into enemy area to get secret information and can keep an eye on enemy. The antiterrorist robot can also be used in malls, jewellery shops, show rooms, etc. where there can be a chances of threat from terrorists.**

***Keywords*— Anti-terrorist Robot; Wireless camera; RF Operated; Laser gun.**

I. INTRODUCTION

The main focus is on terrorism and security may have geared up following the 9/11 attacks in the USA where 101 people including 14 policemen and 9 foreigners lost their lifes and about 300 peoples were got injured in the horrible attack. The chances of terrorist attack can never be eliminated, but responsible steps can be taken to save the precious life of soldiers and peoples. Many soldiers were struggling to save the people inside the Taj hotel in Mumbai whereas many people lost their life from this an idea is strucked in our mind to design a robot which can tackle with such worst situations.

The anti-terrorist robot is modified version of combot robot where laser gun is installed on robot which is operated using remote to kill the enemy. This robot is self -powered and can be controlled easily like a normal car. Wireless camera is also installed to send like footage of war field on the screen.

The main objectives of designing a robot are.

1. Where man dares not endeavor

Robots have been designed to put in too hazardous environments where man cannot fight.

2. We even make them to fight in war fields

The main aim to design an anti-terrorist robot is that it efficiently used to minimize the human casualties in terrorist attacks.These types of robots were used in Afghanistan and Iraq wars make us wonder if robots have indeed become intelligent!

War field robots of various shapes and sizes were used to defuse landmines, search for criminals hiding in the caves, search for bombs under cars and in building, when required. Real time video and audio signals will be sent by Wireless camera, which could be seen on a remote monitor, and action can be taken accordingly.

3. Self-blast

When the robot is surrounded by lots of terrorists and the situation is too difficult to kill them, at that time this robot will self blast and kill all the terrorist surrounded by it.

Our aim is to develop a bot which will be efficiently used to minimize terrorist causalities and being able to achieve reliable long distance communication is an important open area of research to robotics as well as other technology areas. As interest in robotics continues to grow, robots are increasingly being integrated into everyday life.

Currently, the primary mode for robot communication uses RF. RF is an obvious choice for communication since it allows more information to be transferred at high speed and over long distance. This paper explores the use of readymade RF networks for communication and device control. The wireless communication may be accomplished through optical communication or radio frequency communication.

II. HARDWARE IMPLEMENTATION

The block diagram of the hardware implementation of Entire system is as shown in the Figure 1.

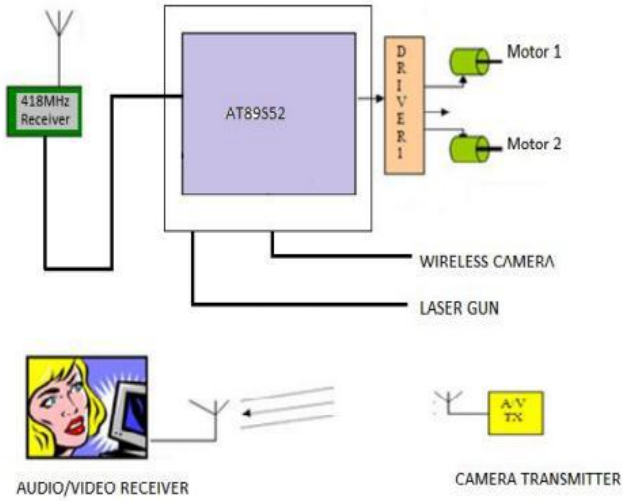

FIG.1-BLOCK DIAGRAM

Heart of this robot is Intel's most power family of microcontroller AT89S52.This robot is RF operated, self-powered and has all the controls like a normal car. A laser gun has been installed on it, so that it can fire on enemy remotely Microcontrollers are responsible for executing all the commands received from the master and also generating PWM pulses for the speed control. It behaves like Slave microcontroller which executes all the commands received from the master.

Based on the input provided, master will give command to slave microcontroller and robot will behave as follows.

- moves in forward direction
- moves in reverse direction,
- speed controls in both the direction
- it can even turn left or right while moving forward or in reverse direction.
- Instant reverse or forward running without stopping.

A. *Transmitting unit*

Here a variable frequency oscillator 1 is used for modulating the frequency i.e. to be transmitted and has its output to a high frequency oscillator 2 for generating a carrier wave. The carrier wave is then radiated into space by the antenna. The transmitter module is shown in Figure 2.

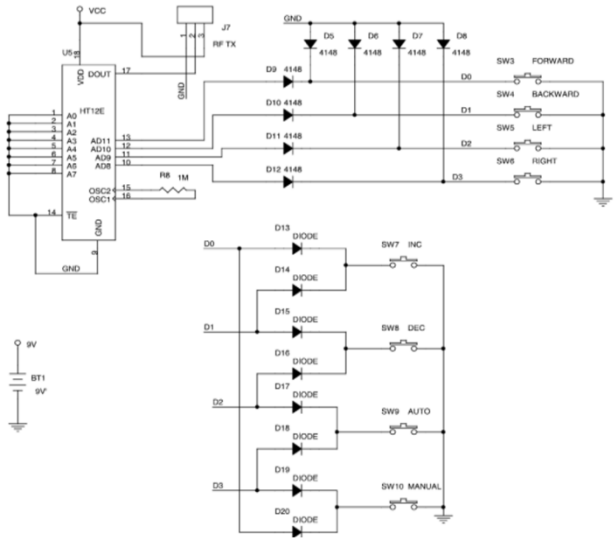

FIG.2- TRANSMITTING MODULE

B. *Receiving Unit*

The receiving antenna is connected to a tuned signal detecting circuit for detecting the signal transmitted by transmitter antenna. The output of the tuned signal detecting circuit is connected to amplifier which amplifies the weak signal received in turn has its output connected to the input of the high pass frequency as well as the filter to a low pass frequency filter. The outputs of amplifiers are connected to separate DC motors .

.The high pass frequency filter extracts the higher frequency components of the output signals from the amplifier and the low pass frequency filter extracts the lower frequency components of the output signal from the amplifier .The receiver module is shown in Figure 3.

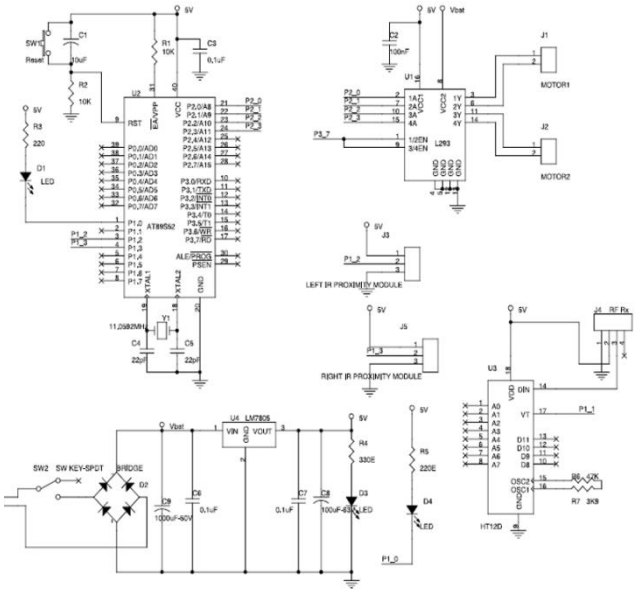

FIG. 3- RECEIVER MODULE

III. COMPONENTS OR SUBSYSTEMS DESCRIPTION

A. *Microcontroller AT89S52*

It is the heart of the robot which controls all the activities of transmitting and receiving. The IC used is AT89S52.Low-power, high-performance CMOS 8-bit microcontroller with 8KB of ISP flash memory. The device uses Microchip high-density, nonvolatile memory technology and is compatible with the industry-standard 80C51 instruction set and pinout. On-chip flash allows the program memory to be reprogrammed in-system. For many embedded control applicationspowerful microcontroller is suitable.

By combining a versatile 8-bit CPU with in-system programmable Flash on a monolithic chip, the Atmel AT89S52 is a powerful microcontroller which provides a highly-flexible and cost-effective solution to many embedded control applications. The standard features-256 bytes of RAM,32 I/O lines, two data pointer, watchdog timer, three 16 bit timer/counter, a full duplex serial port, on chip oscillator and clock circuitry.

B. *Power supply circuit*

The power supply is the main building block of any electronic system which provide required power for their operation and is as shown in the Figure 4. For the microcontroller, keyboard, LCD, RTC, GSM +5V are required & for driving buzzer

+12V is required. The power supply provides regulated output of +5V & non-regulated output of +12V. The power supply circuit consist of bridge rectifier which gives an output as pulsating DC voltage then it is filtered by the capacitor where ac components are passed and dc voltage is blocked. This unregulated DC voltage is supplied to the input pin of regulator IC. The IC used are fixed regulator with internal short circuit current limiting & thermal shutdown capability.

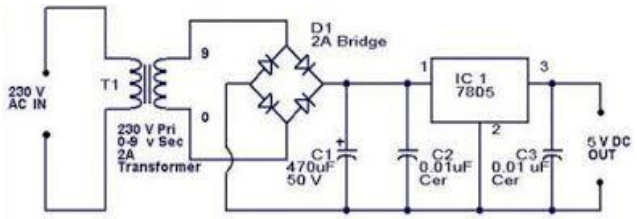

FIG. 4-POWER SUPPLY

C. Decoder HT-12D

The 2^{12} decoders are a series of CMOS LSIs which are used for remote control system applications. For proper operation, a pair of encoder/decoder with the same number addresses and data format should be chosen. The 2^{12} series of decoders are capable of decoding information that consist of N bits of address and 12-N bits of data. Of this series, the HT12D is arranged to provide 8 address bits and 4 data bits, and HT12F is used to decode 12 bits of address information. The VT pin also goes high to indicate a valid transmission.

The features of decoder IC are as follows-

- Operating voltage: 2.4V~12V
- Low power and high noise immunity CMOS technology
- Low standby current
- Capable of decoding 12 bits of information
- Binary address setting
- Received codes are checked 3 times
- Address/Data number combination
- HT12D: There are 8 address bits and 4 data bits
- HT12F: There are 12 address bits only

D. ENCODER HT-12E

The 2^{12} encoders are a series of CMOS LSIswhich are used for remote control system applications. They are capable of encoding information which consists of N address bits and 12-N data bits. Each data/addresses input can be set to one of the two logic states. The programmed data/addresses are transferred along with the header bits via of a medium RF transmission up on receipt of a trigger signal. The capability to select a TE trigger on the HT12E or a DATA trigger on the HT12A further enhances the application flexibility of the 2^{12} series of encoders.

The features of Encoder IC are as follows-

- Operating voltage :
  -2.4V~5V for the HT12A
  -2.4V~12V for the HT12E
- Low power and high noise immunity CMOS technology
- Low standby current: 0.1µA (typ.) at VDD=5V
- Minimum four word are transmitted in HT12E

E. DC Motors

For the movement of our robot, we are using DC motors. It is operated by 12V DC power supply. In any electric motor, operation is based on simple electromagnetism. A magnetic field is generated by a current carrying field; when this is then placed in an external magnetic field, it will experience a force proportional to the current in the conductor, and to the strength of the external magnetic field.

F. Motor Driver L293D

To control the motors in autonomous robots, usually a motor driver IC is used which is an integrated circuit chip. Motor driver ICs acts as an interface between microprocessors in robots and the motors in the robot. This IC is used to control 2DC motors simultaneously. The signals from the microprocessor are received by the L293D IC and transmits the relative signal to the motor.

The pin diagram of motor driver IC L293D is shown in figure 4 below -

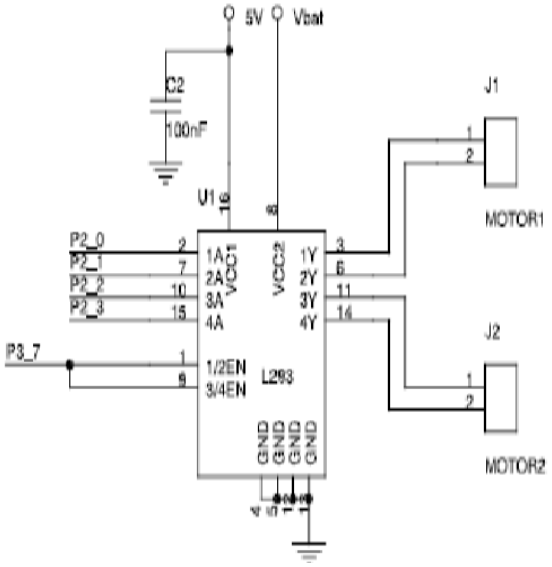

FIG.4 MOTOR DRIVER IC

This device is acceptable for use in switching applications at frequencies up to 5 kHz. The L293D is assembled in a 16 lead plastic package which has 4 center pins connected together and used for heat sinking. To control 2 DC motors, this chip is designed. There are 2 Input and 2 output pins for each motor. The behavior of motor for various input is shown in Table 1.

Operation	A	B
Stop	Low	Low
Clockwise	Low	High
Anti-Clockwise	High	Low
Stop	High	High

TABLE 1. BEHAVIOUR OF MOTORS

G. RF Communication

Electromagnetic wave frequencies are nothing but the Radio Frequency and their range which extends from around 20kHz to 300 GHz. RF usually refers to electrical rather than mechanical oscillations. The RF modules are very small in size and have a wide operating voltage range i.e 3V to 12V. Basically, the RF modules are of 433 MHZ RF transmitter and receiver modules.

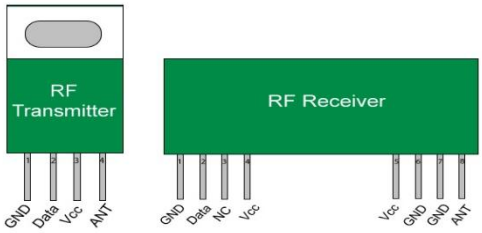

FIG. 5 – RF MODULE

H. Wireless Camera

It is mini wireless monitoring video camera and wireless receiver set mounted on the robot to send live video to the wireless receiver. Simply install the wireless camera in the room where we want to monitor and set the wireless receiver in the next room (up to 15 meters away) and hook it up to a TV or DVR to watch the action or record the footage for the security records. Here we are placing this wireless camera in the anti-terrorist robot. Depiction of AV Receiver wireless camera is as shown in Figure 5.

FIG.5 -WIRELESS CAMERA RECEIVER

IV. SOFTWARE IMPLEMENTATION

For the software implementation, we used two softwares. First one is the Keil µVision 3.0 and another is the Flash magic simulator.The Keil µVision Debugger accurately simulates on-chip peripherals (I²C, CAN, UART, SPI, Interrupts, I/O Ports, A/D Converter, D/A Converter, and PWM Modules) of 89S52 device.The programming of robot have been done in embedded C and using Keil IDE software it is stored in microcontroller. Flash magic is used to dump the code to microcontroller from PC. It only accept the Intel HEX files generated by keil compiler to be sent to target microcontroller. It detects the hardware connected to the serial port.

A. Flow charts

The flowcharts shows the Robot Movement shown in Figure 6 and 7.

1. Robot Movement :

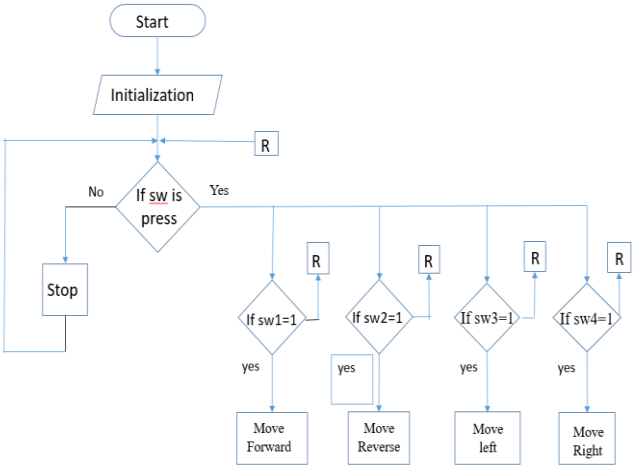

FIG. 6- FLOWCHART FOR ROBOT MOVEMENT

2. Laser Gun Movement:

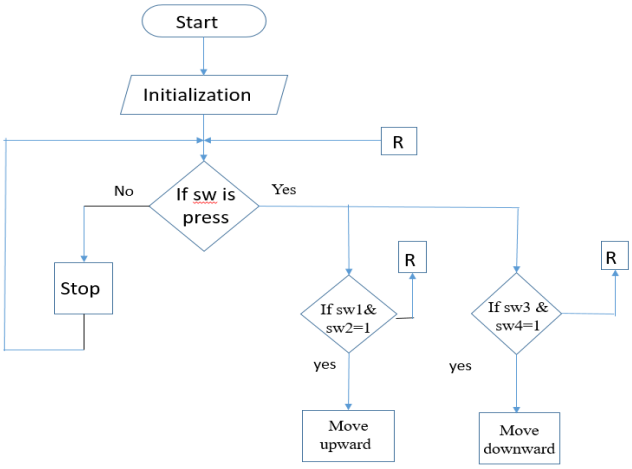

FIG 7- FLOWCHART FOR LASER GUN MOVEMENT

V. RESULTS AND DISCUSSION

Remote controllers are specifically designed to direct the orientation of robot and to operate the laser gun. Robot keeps on moving in one modes i.e., Manual mode not in self-mode. It's brought under user's control in the case of manual mode. It's brought under user's control in the case of manual mode. In self-mode, robot starts to move over surface and takes action according to the situation. By watching a real time video which is sent by the camera, the person which is seated at the base station which takes actions against that i.e. forward, backward, left, right; shooting the enemy & self-suicide.

FIG 8: TOPVIEW

VI. APPLICATIONS

- Can be adequately implemented in national defense through military-industrial partnership.
- Can be used in shopping malls, jewellery shops, resorts, borders of noted buildings, etc.

VII. CONCLUSION

India is sick off massive terror attacks, bomb explosions and many more in today's current situation.To overcome or to avoid such terror attacks TECHNOLOGICAL power must be needed. It's our onus to take an initiative to design a model of a suitable robot that meets combatant needs. So to avoid terror attacks and to ensure more security at the border and high density areas it's wise to maintain a world class military technology in accordance with combatant needs. To avoid such disasters TECHNOLOGICAL power must exceed HUMAN power. Human life and time are important. Even every nation needs its own defense system for their integrity and security. In such a way construction of these robots will carry nation's name, fame globally.

REFERENCES

[1]. Abdus Samad, Jadhav Devidas Dashrath, Dhaigude Madhukar Kumar, "An Intelligent Combat Robot", International Journal of Advanced Research in Computer and Communication Engineering (IJARCCE), May 2014.
[2]. Mr.Vinod Kumar, S.SubramanyamSastry, P.V. Vara Prasad Rao, "A New Product Design and construction of an Intelligent Combat Robot for war fields", International Journal of Computer Science, Information and Engineering (IJCSIET), 2014.
[3]. Mr.Abhinav Kumar Singh, NilayaMitashShanker, Anand Prakash Yadav, "RF Controlled Terrorist Fighting Robot", International Journal of Computer Science & Communication (IJCSC), June-2010.
[4]. Mr. Gaurav Vaishith, Mr. Rahul Dhod, "Defence Surveillance Robot Based on RF and DTMF Technology", International Journal of Advanced Research in Electrical, Electronics and Instrumentation Engineering (IJAREEIE), June 2015.
[5]. Ms. Apoorva Shrivastava, Ms.Arpita Tiwari, Ms.Ashi Sinha, "Design of Army Fielded Combat Robot", International Journal of Advanced Journal in Science and Engineering (IJARSE), October-2013.
[6]. Omar Said, Mehendi Mausad, "A Space Unrestricted Multi-Robot Combat Internet of Things System", Advances in Internet of Things, Scientific Research Journal, July-2012.
[7]. Yvan Baudoin, "Advanced Adaptive Control for outdoor mobile robotic systems facing Unstructured Environments: Application to Humanitarian Demining", Royale Military Academy, 2012.
[8]. Shubhangi Nikhar, AchalShahare, "NEED TO DEVELOP ROBOT FOR ELECTRONIC WARFARE—A REVIEW", International Journal of Mechanical Engineering and Robotic Research (IJMERR), 2014.
[9]. Dr. Dushant Singh, Sonam Jain, Gaurav Dubey, RavikantVerma, Rahul Sharma, "Land Mine Detection Robot" , International Journal of Scientific Research & Development (IJSRD), Voume 3, Issue-3, 2015.
[10]. Akhil A., D. VekantaSubramaniayam, "A Descriptive Study and simple design of Anti-terrorist robots", International Journal of Computer Science and Communication (IJSCC), 2015.
[11]. Pete Miles & Tom Carroll, Build Your Own Combat Robot, (2002).
[12]. K.S.Fu ,R.C.Gonzalez , C.S.G..Lee, Tutorials Robotics.
[13]. Asaro,P. How just could a robot war be?, Frontiers in Artificial Intelligence and Applications, 75, 50-64.
[14]. S. Y. Harmon & D. W. Gage, "Current Technical Research Issues of Autonomous Robots Employed In Combat", 17th Annual Electronics and Aerospace Conference.
[15]. Atmel datas heets http://www.keil.com/dd/docs/datashts/atmel/at89s52_ds.pdf
[16]. Robert L.Boylestad and Louis Nashelsky, "Electronic Devices and Circuit Theory", 8th Edition, 2006
[17]. DecoderHT-12D,EncoderHT-12E http://robokits.co.in/shop/index.php?main_page=product_info&cPath=14_15&products_id=76>

.