A Comprehensive Review on Electric Vehicles Developments

Deepanshu Vaishnav[1] and Vinay Sati[2]

[1]*Scholar, B. Tech 2nd Year Student, Department of ME, Amrapali Institute of Technology, Haldwani, Uttarakhand, India*
[2]*Assistant Professor, ME Department, Amrapali Institute of Technology, Haldwani, Uttarakhand, India*

Abstract: **the world of environment protection and conservation of fossil fuel are growing day by day .the development of electric vehicle (EV) and Hybrid electric vehicles will Enhance the movement of conserving fossil fuel by the use of electric vehicle we can save the environment of the earth. When fossil fuel burn the produce a lot of harmful gases which are responsible for the global warming .fossil fuels are the main source of power generation in vehicles that's why use fossil fuels in vehicles .Instead of using fossil fuel as a power generator in vehicles we can use power generated through electricity that is battery instead of fuels . By using batteries we can generate power invehicles. And we can conserve fossil fuels for our next generation.**

I. INTRODUCTION

Electricvehicles are the one powered by an electric motorrather than a petrol/diesel engine. An electric does not have a gasoline engine and is powered entirely by electricity stored in a relatively large onboard battery pack. The onboard battery is rechargeable and recharged by external power sources.Electric vehicle is road vehicle which involves wit electric propulsion electric vehicles may include battery electric vehicles (BEV), hybrid electric vehicle (HEV) and fuel cell electric vehicle (FCEV). Today BEV, HEV and FCEV are in different stages of development, facing different challenges and require different strategies

II. HISTORY

The History of electric are is very old the first electric was made in 1891 the first electric vehicle was built in united state of America after the success of the electric vehicles in 1900 a heyday is launched then Henry ford introduced model T. then the revolution of making electric vehicles is started. Specially electric cars are started in 1974 a car named vanguard-Sebring's .it is a sixthlargest automaker in the U.S Then the decline in use and production of the electric vehicles occurred in the 1920s. Cause of the decline in production includes: a batter road system, reduce the cost of gasoline by the discovery of the Texas oil, Invention in electric vehicles started. According to the history of electric vehicles, "In 1921,an electric roadster sold for $1750, while the gasoline sold in $650". By 1935, electric vehicles completely disappeared. In the 1960s and 1970s the electric vehicles comes again and from 1970s the advancements in electric is occurring day by and Now in present era TESL motor is world's largest electric vehicles making company. This 21st era is called the golden era of electric cars or electric vehicles the in not so far when we see electric vehicles more the internal combustion engine vehicles.

III. DESCREPTION

The electric vehicle is propelled by electric motor that in turn connected with a rechargeable battery pack .rather than a gasoline engine. Electric vehicles look same as gasoline engine vehicle but only the difference is that in electric vehicles. There is electric motor rather than an engine .it is operated by an electric battery

Under the frame electric cars has:

1. An electric motor
2. A controller
3. A rechargeable battery

The electric motor get power from the controller and the controller gets the power from battery

THE electric vehicle has four main components, 1 Potentiometer, 2 Battery, 3 DC controller and motor. As shown in figure:

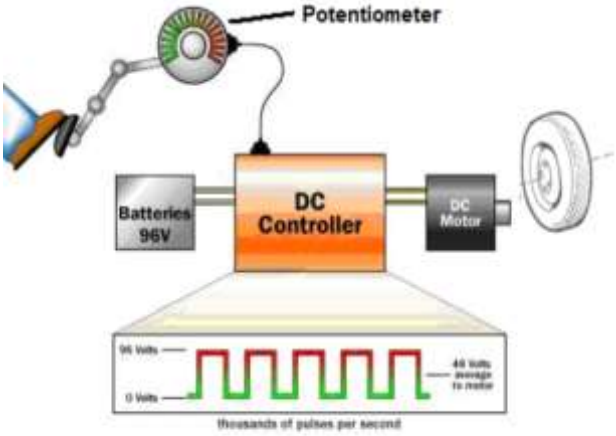

Figure 1. Parts of an electric vehicle [3].

Description of Parts and their Functions

Potentiometer: It is a circuit in shape and it is hooked to the acceleration pedal. The potentiometer, also called the variable resister. Provide the signal that tells the controller how much power it is supposed to deliver

Battery: The batteries provide power for the controller. These types of batteries like lead acid, lithium ion, and nickel-cadmium, battery ranges the power

DC Controller: The controller takes power from the batteries and deliver it to the motor. The controller can deliver zero power (when the vehicle is stop) full power (when the driver floors the acceleration pedal), or any power level in between.

Motor: The motor receives power from controller and turns a transmission. The transmission than turn the wheels, causing the vehicle to run

Why Electric Vehicles: Let us begin with the investigation of the growth of population and vehicles by a graph as shown below. In the next 30 years, the global population will increase from 6 billion to 10 billion and the no of vehicles also increases very fast if all the vehicles are propelled by the combustion engine the pollution will increases very fast and from where we get the oil to run the vehicle . That's why a new technology is required to decrease the consumption of oil and to reduce the Air pollution we discover electric vehicles which are propelled by electricity and produce no Air pollution. From the energy aspect, EVs can offer a secure, comprehensive and balanced energy that is efficient and environment friendly EVs can provide emission-free urban transportation. The increase in the population in upcoming 50 year is shown by the graph given below the graph shows the increment of vehicles with the increase in population

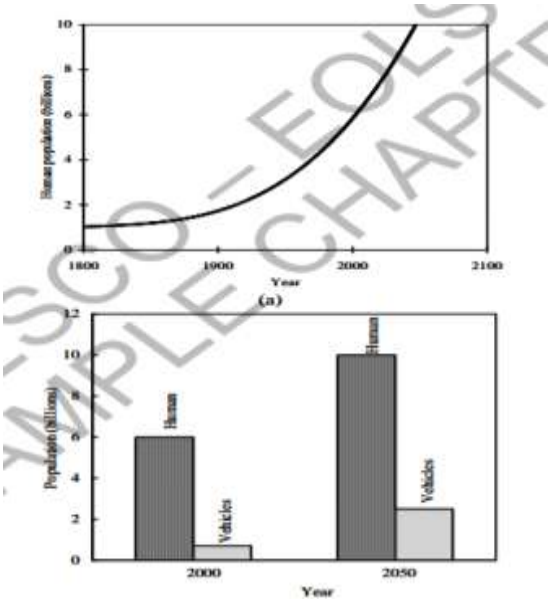

Fig 1 Growth of population and vehicle

To solve the problem from where we manage the oil production for gasoline vehicles we discover electric vehicles.

IV. DEVELOPMENTS

In the next few decades, it is anticipated that both EVs and HEVs will be commercialized, and they will have their own market and their own identity EVs are mainly use the place where electricity is cheap and easy to access, and the place with zero-emission mandate.

HEVs is used for those users who desire long driving ranges,

The research and developments of FCEVs will be accelerated in the next two decades since they have the good deliver the same range of power as the ICEVs gives.In present time we have a numbers of electric vehicles which is in demand like TESLA motors is one of the greatest electric car manufacturing company making daily use vehicles. In present era electric vehicle is not only used for regular use but also used in sports. These are used in car racing's we have NIO EP9Nioan electric super car of top speed of 324 mph driven by electric propulsion.In present time the development of electric vehicles is increasing

Fig 2 NIOP9 an Elecnric Super Car

V. CONCLUSION

The analysis in the contest of the study pint to the vulnerabilities that derives from the introduction of electric vehicles (EVs) in a timeline, as seen in the report the electric vehicles have many advantages and benefits over the internal combustion engine it is cleaner and much more efficient however it also has many disadvantages It is heavier, limited to the distance it can travel before charge, and cost more, the future of the EVs relies on its battery , on the other hand undoubtedly, gasoline has become an ideal fuel, but it also has

its adversity such as very low efficiency and low rpm condition, the available torque is low, the torque is what determine the acceleration capability for a vehicle, On the other hand the EV overcome all the disadvantage of the internal combustion engine vehicle

REFERENCES

[1]. A technical Research Report: The Electric vehicle (2010) by Rony Argueta University of California Santa Barbara

[2]. [MEGEVH network] Generalities on Electric vehicles (EVs) and Hybrid Electric Vehicles (HEVs), (2011) Prof. A.BouscaYrol, Dr.R.trigui (L2EP University Lillie 1, LTE, IFSTTAR

[3]. [Chan 07] C.C. Chan "The state of the art of electric, hybrid, and fuel cell vehicles". Proc. Of the IEEE, April 2007, vol. 95

[4]. [Mi 09] C. Mi, "plug -in hybrid electric vehicles –power electronics, battery management, control, optimization, and V2G', IEEE-ISIE'09, Seoul, July 2009.

[5]. [LCA works] electric vehicles:" A synthesis of the current literature with a focus on economic and environment viability" Mr. Marcello Contestabile, DrGreorge offer, Dr Rohan North, June 2012.

[6]. Electric cars: Effects on the Environment, (1998) Retrieved January 31, 2010 from http://llibrary.thinkquest.org/20463/environment.html.

[7]. Brain, M, (2002). "How electric vehicles work". Retrieved January 29, 2010 from http://auto.howstuffworks.com/electric-car2.htm.

[8]. Electric Vehicles (EVs). (2009) Retrieved January 31, 2010 from http://www.fuelecomy.gov/frg/evtech.shtml.