Warfield Spy Robot with Night Vision Wireless Camera

Suniksha B S[1], Shubhanchal Priya[2], Varshini M[3], Deepthi Raj[4]
[1,2,3]*Dept. of Telecommunication Engg, Dayananda Sagar College of Engg, Bangalore, India*
[4]*Assistant Professor, Dept. of Telecommunication Engg, Dayananda Sagar College of Engg, Bangalore, India*

***Abstract*— The main objective behind the development of this robot is for the surveillance of human activities in the war field or border regions in order to reduce infiltrations from the enemy side. The robot consists of night vision wireless camera which has the function of transmitting the videos of the war field in order to prevent any damage and loss to human life. Since we know military people have a huge risk on their lives while entering an unknown territory so the robot will serve as an appropriate machine for defense sector for the reduction of the loss of human life and will also prevent illegal activities. It will pass the information with the help of all the military people and armed forces to know the condition of the territory before entering it. The robot has the aptitude of detecting the buried mines and ability of letting the user control it wirelessly in order to avoid human causalities. The robot can even act as a path guider in normal case and as a fire extinguisher in emergency. The robots are so designed as it easily detects fire, before it rages out of control, can one day work with firefighters greatly reducing the risk of injury to victims.**

***Keywords*— Wireless camera, Arduino uno microcontroller, Fire detection sensor, Ultrasonic sensor, Mine detector, voice bot.**

I. INTRODUCTION

With the aim of the development of a high-tech technology that serves high speed technology with an advanced feature of controlling the robots and to de- vice new methods of control theory. The above standard with some technical improvement along with the need of high performance robot is required for the creation of a faster, reliable, accurate and more intelligent robot which ought to be devised in an advanced control algorithm, robot control devices and new drivers. Earlier the robots were controlled through wired networks but now to make robot more users friendly, they are framed to make user commanded work which most likely uses voice commands. Therefore, in order to attain the requirements we can use android as a multimedia to control the robot in user friendly manner. Generally, the advent of technology has brought a revolutionary change in the field of robotics and automation that will ranges in all the sectors from household domestic works to the defense sector. Today in the global market, smart phones also have brought a revolution in changing people's lifestyle and providing numerous Applications on different systems. Android operating system is one of these systems build on open source which has made a huge impact providing many applications for robotics to help people in their day to day life. The main technology used here for serial communication with the robot is the Wi-Fi technology. Wi-Fi technology can be used to share data between two de- vices considering the range between two devices. The Wi-Fi module ESP-8266 operating will be connected with the robot and the commands to the robot will be given through the android application. The war field robot consists of Arduino uno board as a controller board. It has L293D motor driver IC 's along with an ESP-8266 Wi-Fi module. Two DC motors are also used for the motion of the robot. An android app- Google assistant is used for controlling the robot using voice commands. The night vision wireless camera is attached with the robot for monitoring the situation and the camera can be rotated 360 degrees via the android application through motor. Mine detection sensor and fire detection sensor are used. Metal detector sensor is used to detect bigger size metallic objects.

II. SCOPE

Work focused on developing a wireless surveillance system, capable of covering more area by its movable wheels. It is better in comparison with the Closed-Circuit Television (CCTV), where only the limited distance is covered while in case of surveillance system, we can stream live video and facilitate the feature of capturing images whenever and wherever we need along with the help of voice command using mobile phone.

III. REQUIREMENTS

A. Arduino Uno

Arduino Uno is a ATmega328P based microcontroller board. It consists of 14 digital input/output pins (6 of which can be used as PWM outputs), 6 analog inputs, a ceramic resonator of 16MHz (CSTCE16M0V53-R0), a connection for USB, a power supply jack, also an ICSP header along with a reset button. It consists of everything that is required to support the microcontroller. To get started just simply connect it to a computer with a USB cable or with an AC- to DC adapter supply power or battery.

B. Night Vision Wireless Camera

It has a unique feature of Automatic Motion detection with a minimum range of 100m transmission distance without

interference in the block. The imaging Sensor has a 1/3 inches inbuilt CMOS. The total CMOS pixel present in the circuit is about 628*582(PAL)/510*492(NTSC).with a minimum illumination of 1.5 lux. The viewing angle is supposed to be 62 Degree. The head weight of the camera is 15 gm.

C. Ultrasonic Sensor

An Ultrasonic transmitter will emit ultrasonic waves in single direction, and starts a timer when it launches the waves. The Ultrasonic sensor spreads waves in the air which would return immediately when the obstacles encountered on the way. At the end, the ultrasonic receiver will stop the timer as it receives the waves that are reflected.

D. Servo Motor

Servo implies an error sensing feedback control which is utilized to correct the system. It often requires a dedicated module that is particularly designed to use with server motors that is generally sophisticated controller. This is a DC motors that will allow precise control of the angular positions. Servo motors are actually DC motors in which the gears lower the speed slowly. The servo motors usually have a revolution cut off from 90 to 180 degrees.

E. D C Motor

A DC motor is rotary electrical machines that changes electrical energy of direct current into mechanical energy. They mostly rely on the forces that are produced by magnetic fields. All types of DC motors consists of some internal mechanism either electromechanical or electronic, which will periodically change the current flow direction in the different motor parts.

F. WiFi Module

ESP8266 is a cost-effective WiFi module ESP8266 is one of the cost-effective devices which supports both TCP/IP as well as microcontrollers. It works at maximum voltage range around 3V to 3.6V. More often it is also available under the name of ESP8266 Wireless Transceiver. This module has a higher processing speed and storage capability compared to the prior. Very little modification and development is required to make it compatible with other devices when it is interfaced with sensors.

G. H Bridge

An H bridge is an electronic circuit which switches polarity of the applied voltage to load. These circuits are often used in DC motors to run the robot and other applications forwards or backwards. H bridge is used by most direct alternative current converters, most AC to AC converters, the DC to DC and many other kinds of electronic devices use H bridges. In particular, a bipolar stepper motor is driven by a motor controller with two H bridges.

H. Fire Sensor

This fire sensor circuit detect heat from fire. As soon as it senses heat, a loud alarm is heard which simulates the Fire brigade. The circuit is highly sensitive and has the ability detect a small rise in temperature such as 10 degree or more in its surrounding. Signal diodes such as IN 34 and OA 71 exhibits properties in which the temperature rises when the internal resistance of these devices decreases.

I. Mine Detector

Metal detector is an electronic instrument which will detects the presence of any metallic object nearby. They are useful in finding metal inclusions hidden within objects or even the metal objects that are buried under the ground. They moreover have a handheld unit along with a sensor probe which can be used to sweep over the ground or even objects. Once the sensor is brought near a piece of metal indication is given by a changing tone in the earphones, or a pointer pointing on an indicator. Usually indication of distance is also given by the device, the earphone tone goes higher when the metal is nearer. Another common type are stationary metal detectors which detects metal that is concealed on a person's body when walked through it that are available in places like prisons, courthouses, and airports.

J. Light Sensor

Photodetectors can also be called as photo sensors. These are light sensors which also detect electromagnetic radiations. It consists of a p n junction that converts photons into current. The photons absorbed make electron hole pairs in the depletion region. Few examples of photo detectors are Photodiodes and photo transistors. Light energy is converted into electrical energy by solar cells with the energy they absorb.

K. Arduino IDE

Arduino is a platform for open-source electronics that is based on easy-to-use hardware and software. Arduino boards are capable of reading inputs such as light on a sensor, a finger on a button, or a Twitter message and turn it into an output like activating a motor, turning on an LED, publishing something online. Instructions can be sent to the board on what to do when a set of instructions are sent to the microcontroller on the board. To do so the Arduino programming language (based on Wiring), and the Arduino Software (IDE), based on Processing can be used.

L. Voice bot

Voice bot is a voice-user interface (VUI) that makes spoken human interaction with computers possible by using speech recognition to understand spoken commands and answer questions, and typically text to speech to play a reply. A voice command device (VCD) is a voice user interface controlled device.

IV. IMPLEMENTATION

The robotic vehicle is equipped with a wireless camera which will have a night vision capability for surveillance purpose. The night vision camera used allows for transmitting real time night video even in the dark environments. Whatever is recorded by camera can be viewed in PC or a television for reference. The vehicle can be easily controlled re- motely by an android device using voice bot. It uses android application commands and voice commands to move in front, back and left- right directions. The vehicle consists of fire sensors and metal detectors which detects in case there is any forest fires or any other emergencies. It consists of ultrasonic sensor which is used to detect obstacles at a distance. Light sensors and pressure sensors are also being used to monitor the environmental parameters. The vehicle consists of various receiving devices that has been interfaced with Arduino Uno, on receiving command from the receiver the Arduino uno operates the movement of the motor through the drive. Since the robot vehicle can be operated using any android device it provides a good user interface for handling the vehicle. The android device can operate the robotic vehicle at a good WiFi communication range. The night vision camera mounted on the robot allows for efficient spying even in the darkest areas using infrared lighting.

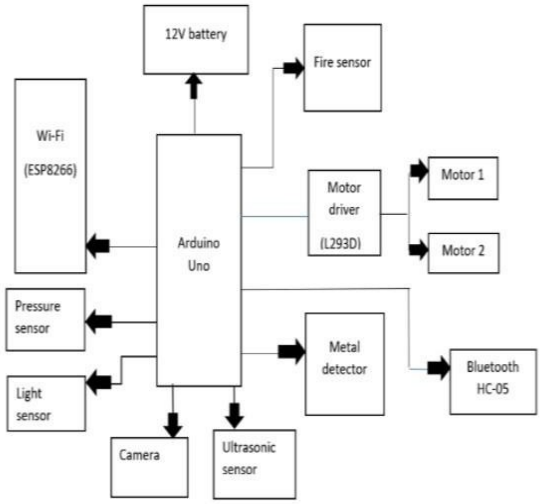

Fig 1. Block diagram of the robot

V. RESULTS

The data obtained by the camera is successfully transmitted to desktop or the laptop of the user. The robot follows the voice commands given by the user. By default the robot moves in the forward direction. It can also be controlled manually or by giving the voice commands through a voicebot application. A pop up message is displayed to the user when any fire, pressure or an obstacle is detected in its path and it is programmed in such a way that it changes its direction when there is an obstacle or fire in its surroundings. The fire sensor can also detect the smoke. The ultrasonic sensor detects an object up to the range of 10cms.

The wireless night vision camera transmits an image or the video of 8 megapixel. A TV tuner card is inserted in the laptop to view the video and images of its surroundings. The TV tuner card helps in receiving the video signals that are transmitted by the night vision wireless camera. The camera can also rotate 360 degrees so that the entire environment can be captured by the camera.

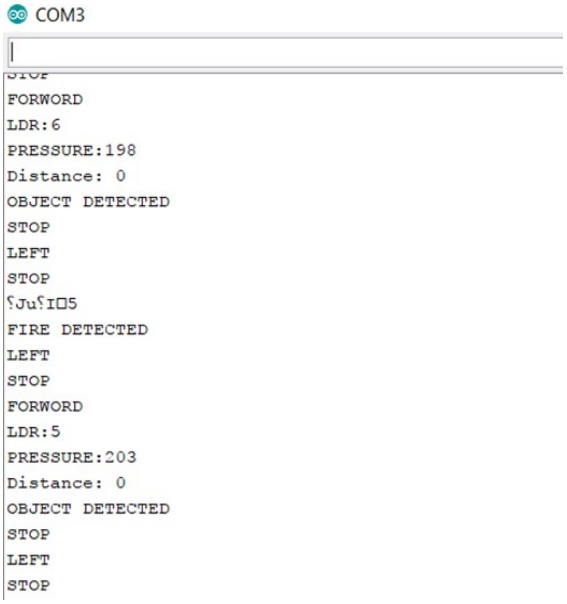

Fig 2. Results displayed on arduino window

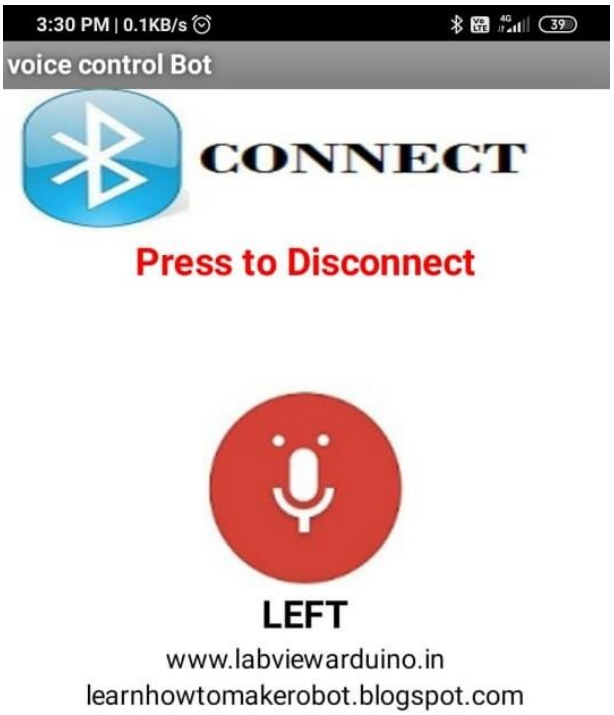

Fig 3. Voice commands given through voicebot application

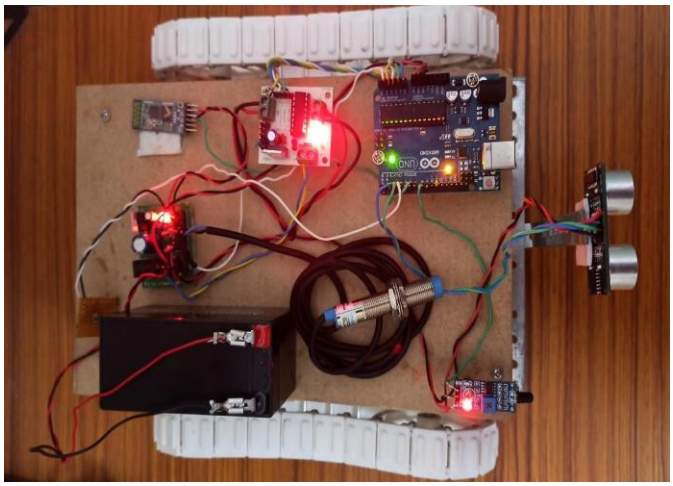

Fig 4. Insight of the robot

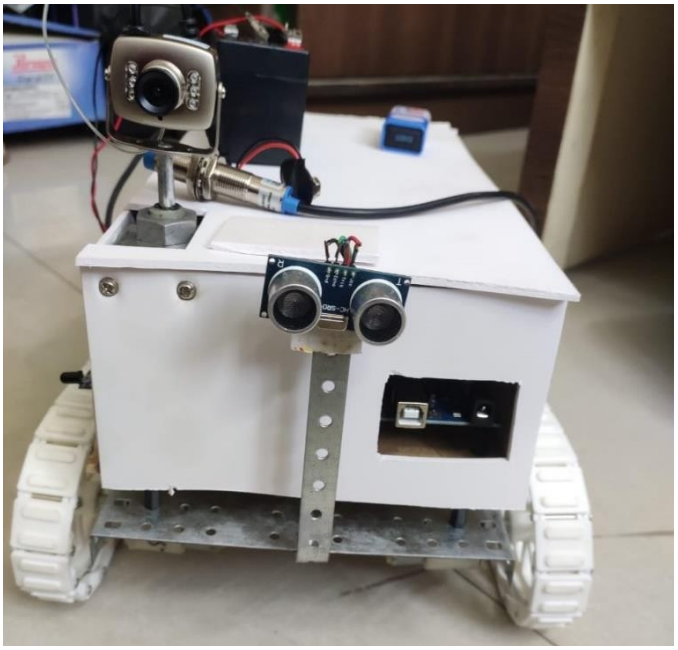

Fig 5. Robot with night vision camera

VI. CONCLUSION

The development of the robot is done so that it takes risk out of potentially deadly scenarios than on the immediate danger caused to life and limb and the robot also provides the live surveillance since it has wireless camera and provides safety and security from the risks that soldiers face in the war field. It also reduces the infiltrations from the opponent side. The wifi module can be used for serial communication since it has a longer range. The robot also consists of many sensors which helps in detecting the conditions in the war field and can be used to take precautions. Since it has wireless communication it is human friendly and much reliable. So with the advancement in the technology the robot can be enhanced by adding more features to it. The robot can be made more miniature in size and it can be controlled through voice or actions which makes the controlling of robot much easier. The motors can be mounted on the robot which in turn is connected to the wireless camera so that it allows three hundred-and-sixty-degree rotation and the robot can be used for efficient surveillance of the environment. It also helps in taking images simultaneously while we are live streaming a video from the war field. Other features like adding a robotic arm helps to pick up things which can be used for further investigation. Therefore, this robot can reach where humans cannot possibly go and transfers the data of the environment and also track location of the enemies.

REFERENCES

[1]. Sreejith.M.A, Vivek.S.K, Vimal Kumar.S.N, “Spy Robot Wireless Video Surveillance using Arduino”, International Journal of Recent Trends in Engineering & Research (IJRTER) Conference on Recent Trends in Electrical and Electronics Engineering (RTEEE ’19) Special Issue; March- 2019 [ISSN: 2455-1457].

[2]. Dilliraj.E, Rekha.S, Sindhu Priya.N.R, Vedhavalli. A, "R F Controlled Warfield Spy Robot Using Night Vision Wireless Camera", Volume 8, Issue 3 , March 2019

[3]. Snehal Subhash Bhosale, Vidya Tukaram Shejwal, S.M.Lambe, "RF Based Night Vision Robot Using PIC Controller", IJARIIE-ISSN(O)-2395-4396, Vol-5 Issue-2 2019

[4]. Qureshi Afaan,Sunsara Hanan,Ansari Sajid,Ansari Ejaz and Khan Amir, "Very Long Range Spy Robot With Obstacle Detection", International Journal Of Scientific & Engineering Research Volume 9, Issue-2, February 2018

[5]. Jignesh Patoliya, Haard Mehta, Hitesh Patel. V T Patel, Changa Anand, “Arduino Controlled Warfield Spy Robot Using Night Vision Wireless Camera and Android Application.” Department of Electronics and Communication Engineering Charotar University of Science and Technology, Gujrat: 388421.

[6]. Lavanya KN, Ramyashree D, Nischitha B R, T Asha, C Gururaj, "Vision Interfaced Warfield Robot With Wireless Video Transmission", Proceedings of the 2nd International Conference on Trends in Electronics and Informatics (ICOEI 2018) IEEE Conference Record: # 42666; IEEE Xplore ISBN: 978-1-5386-3570-4

[7]. Akhilesh J Akhil Krishnan G, Gokul R Sekhar, Sujith S, Jesna K A B.Tech, Department of Electronics and Communication Engineering, College of Engineering Perumon, Kerala, India. “Spy robot with wireless camera” International Journal of Innovative Research in Science, Engineering and Technology ISO 3297: 2007 Certified Organization Volume 6, Special Issue 6, March 2017.

[8]. Aaruni Jha, Apoorva Singh, Ravinder Turna, Sakshi Chauhan SRMSWCET, UPTU, India “War Field Spying Robot With Night Vision Camera”, Journal of Network Communications and Emerging Technologies (JNCET) Volume 2, Issue 1, May (2015).

[9]. Neil, MacMillan, “Range –based navigation system for mobile robot.” Computer and Robot vision - 2011Canadian Conference on IEEE 2011. International Journal for Modern Trends in Science and Technology Volume: 03, Special Issue No: 02, March 2017 ISSN: 2455-3778.

[10]. Rohan Gaikwad, Boarkar, Kunal, and Ajay R “Wireless Controlled Surveillance Robot” International Journal 2.2 (2014).

[11]. G.N Saridis, "Toward the realization of intelligent controls", Proceedings of the IEEE, vol. 67, no. 8, pp. 1115- 1133, Aug. 1979.

[12]. Kirti Bhagat, Sayalee Deshmukh, Shraddha Dhonde, Sneha Ghag, “Obstacle Avoidance Robot”, International Journal of Science, Engineering and Technology Research (IJSETR), Volume 5, Issue 2, February 2016 .